J.BURROWS

ASSEMBLY INSTRUCTIONS

MATRIX LARGE SIT STAND DESK

JBGASSITWE

JBGASSITBK

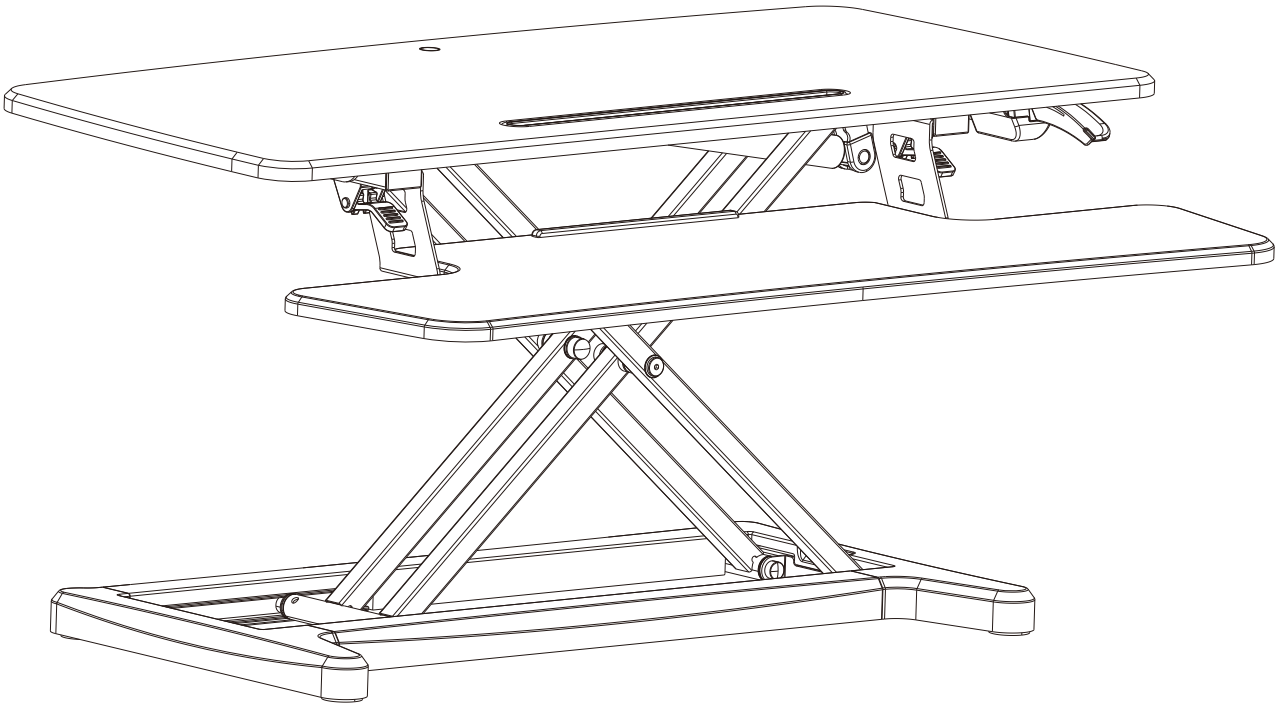

This design and instruction booklet is subject to copyright.
www.officeworks.com.au

1CTN

For spare parts or hardware call 1300 OFFICE

Customer Service Contact Details

Spare Parts & Hardware

1300 OFFICE

People Required

WARNING

- If parts are missing, broken, damaged or worn stop using the product until all repairs are made using manufacturer authorised parts.
- Failure to follow these warnings could result in serious injury.

DANGER

- CHILDREN MUST BE SUPERVISED.

Officeworks Ltd | 236-262 East Boundary Road | East Bentleigh | 3165 | AUSTRALIA

PARTS LIST

① 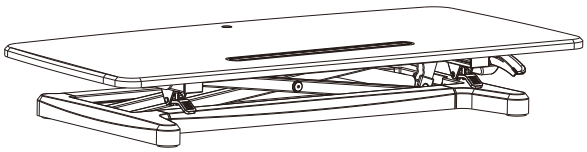 1pc	② 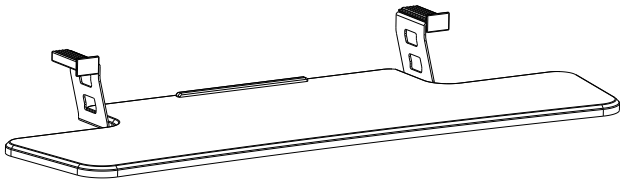 1pc

Step 1

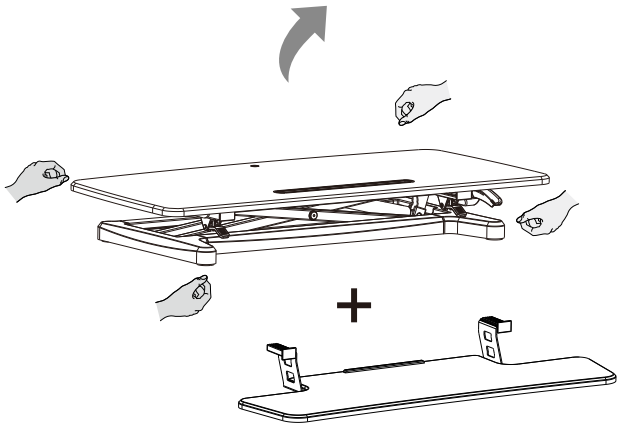

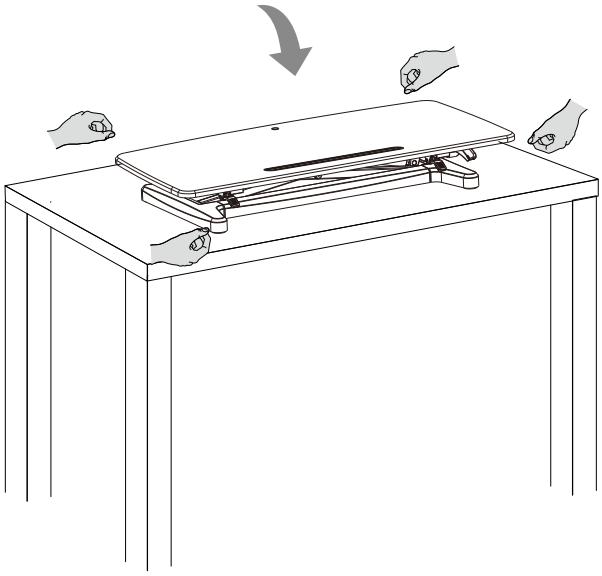

CAUTION

Only use the sit stand desk on top of flat and stable surface, strong enough to support the product and any equipment placed on top of it. Allowing any part of the base or stand to hang over the edge may result in property damage and or personal injury.

Step 2

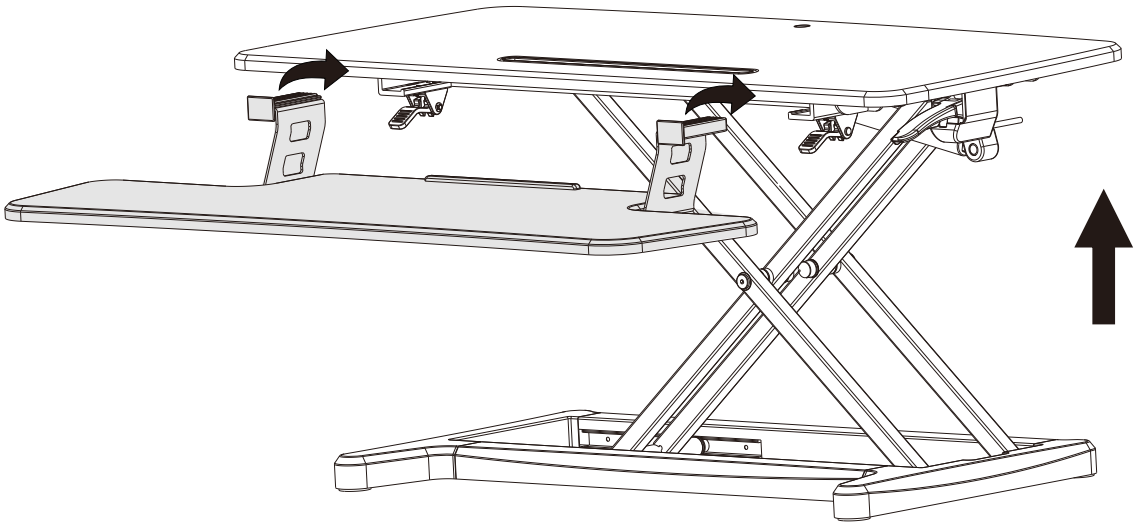

Push the keyboard tray connector into the slot and lock it.

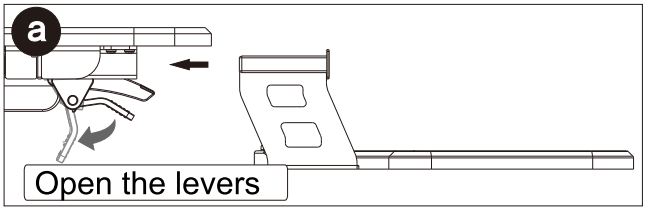

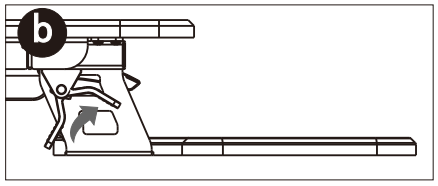

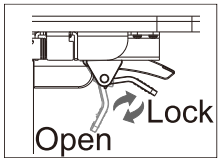

When removing the keyboard tray, please open the levers and remove it.

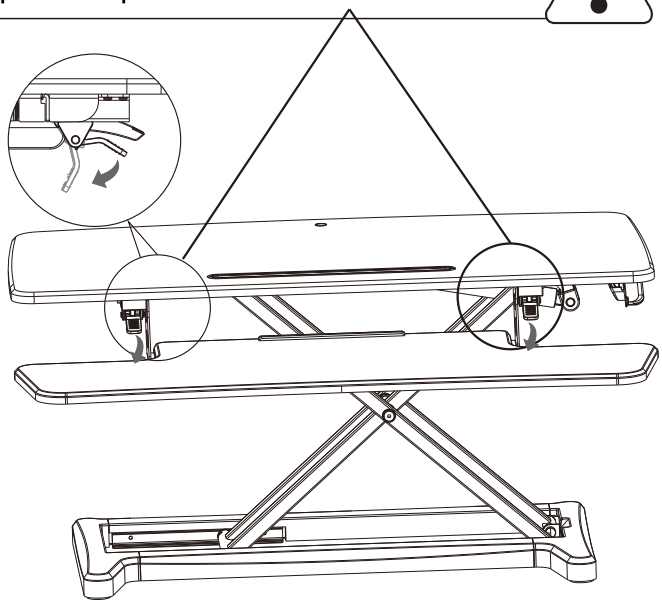

Step 3

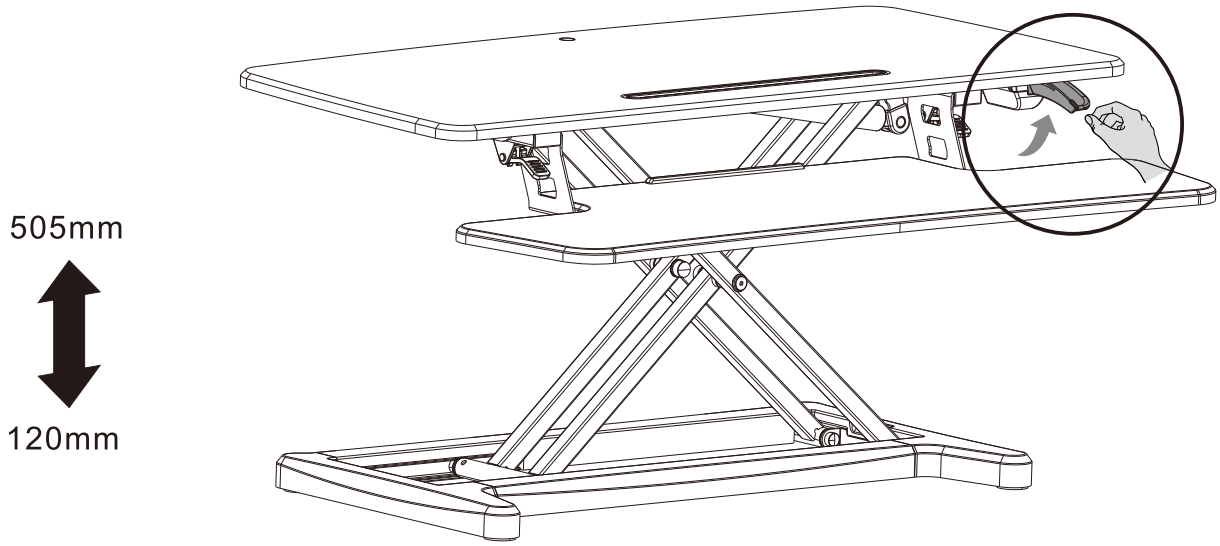

CAUTION

DO NOT place hands on or near support bars. Pinch points are created during lifting and lowering the desktop. Failure to follow these instructions may result in serious personal injury.

Step 4

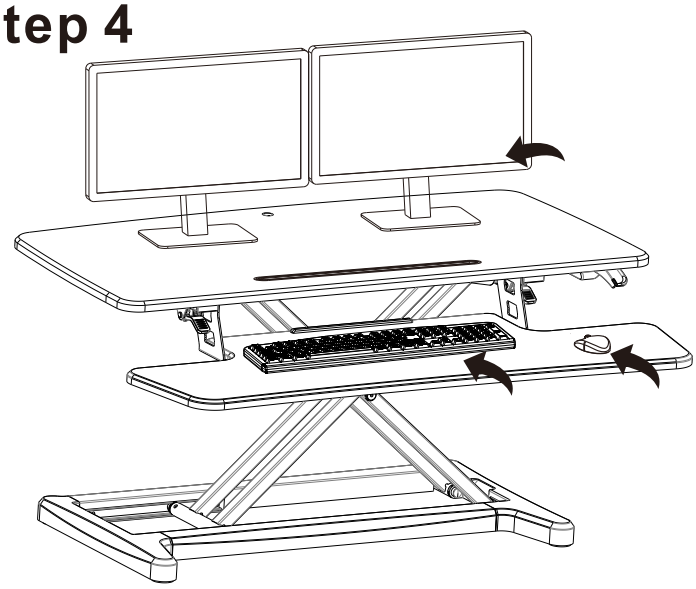

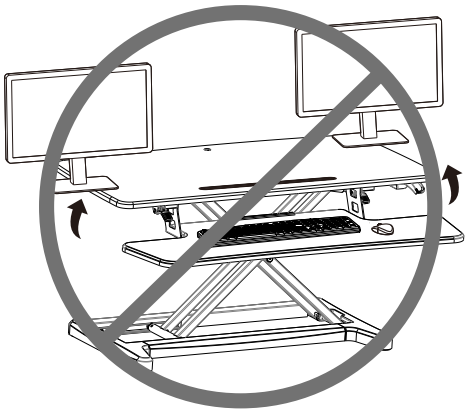

CAUTION

Ensure that no equipment hangs over the desktop as this may result in property damage and or personal injury.

Step 5

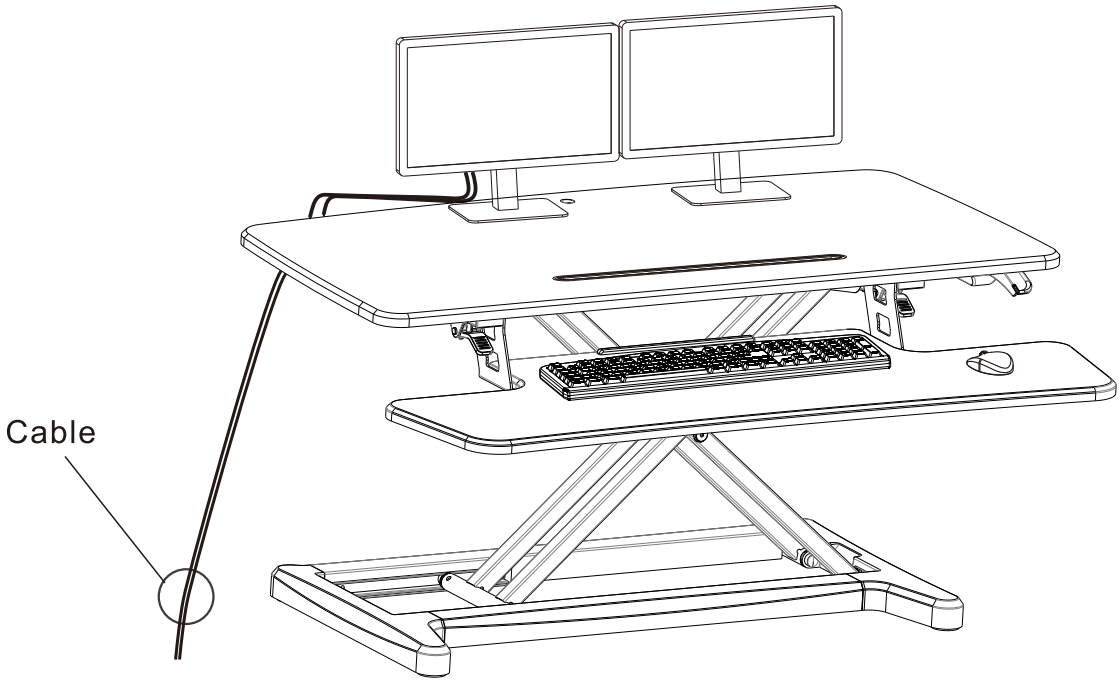

CAUTION

Leave enough slack in cables to allow for full range of vertical motion. Failure to follow this warning may result in property damage and or personal injury.

MAXIMUM WEIGHT CAPACITY

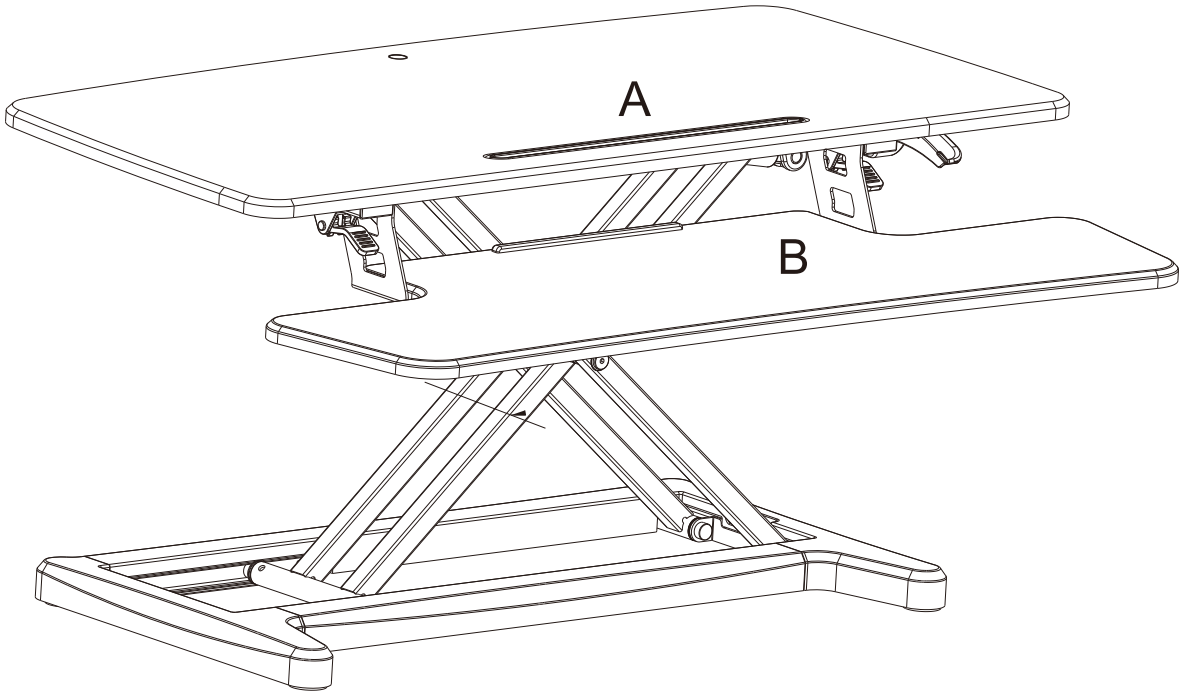

Maximum raising weight capacity	Maximum static weight capacity
A: 12kg	A: 45kg
B: 2kg	B: 6kg

CAUTION: This product is intended to hold the maximum weight indicated. Exceeding the maximum weight will result in instability and may cause injury.

Thank you for your purchase. Please retain your receipt to validate warranty.
If you would like to know more about our furniture products, please visit www.officeworks.com.au