TWIST LIGHT TOWER

Twist:
Twist is an interesting word. It can be both a verb and a noun simultaneously in that it can be an action as well as the result of an action. To twist is to turn or change a things shape under torsion. After twisting, the object assumes a spiral shape. This has formal, material, as well as structural implications all of which informed our proposal for an observation tower for San Jose's Arena Green.

Form, Geometry and Visual Dynamics :
Twisting is a corporeal experience to which we can all relate. Even without understanding the definition and its geometric implications, people intuitively understand the meaning of twist especially when it comes to dancing a particular dance that bears its name. Classical sculptors understood the importance of twist through the compositional technique of contrapposto that rotated upper and lower body parts of a sculpture bringing a sense of life to a lifeless piece of marble. Likewise, a 20° rotation in twelve increments brings the Twist Light Tower to life. It appears different from all angles due to this simple maneuver. The tower's elliptical plan was chosen for its ability to enhance the reading of the displacement of volume appearing wider from some angles and narrower from others. Rotating the ellipse in an upward spiral motion creates a visual effect. When one moves around the tower it appears to be dynamically shifting its weight spiraling from bottom to top. The 240° rotation of the tower enables it to align itself with the park and adjacent streets below while at the same time aligning diagonally with the panoramic view of downtown San Jose from the observation deck above.

Legacy of Innovation:
The technological innovations of Silicon Valley have found their counterpart in the structural daring and innovative use of materials in the Twist Light Tower. This proposal follows a lineage of structural daring and innovation that started with the San Jose Electric Light Tower and its European cousins the Eiffel Tower in Paris and Vladimir Shukov's various hyperboloid structures in Russia that tested the limits of steel construction to achieve maximum height with limited materials. If the 20th century built a legacy of observation towers in steel and concrete that achieved record heights, it has only been in recent years that they have been constructed using wood as a structural component. If built Twist Light Tower would set a new record for observation towers through its use of mass timber. The unique hybrid structure would have a core of concrete and an exterior diagrid of glu-lam timbers with steel hoop rings and tensile cables all sheathed in a sustainable wood screen.

Sustainability and Net-zero Energy:
The amount of steel used in the project has been significantly reduced through the use of wood as a primary structural element. Wood reduces the weight of the entire building while maintaining structural stability. The overall reduction in tonnage means that the foundation required to support the building has also been reduced thus limiting the amount of concrete that needs to be used. In addition, wood will also been used as a substitute for other less sustainable materials wherever possible. It will be used as a decorative screen surrounding the tower, as CLT panels for the roof of the Hall of History, and as the floor of the observation deck. The wood screen, glu-lam timbers, and CLT panels will be FSC certified and sustainably harvested. The use of wood significantly decreases the embodied energy of the entire structure while increasing the amount of carbon sequestered in the building of the tower.

To achieve the goal of net-zero energy usage, strategies for on-site power generation as well as passive strategies to heat and cool the building will be employed. A photovoltaic array will be installed around the base of the tower to provide solar power and act as a protective canopy. Solar energy will be used to power the LED lights that light up the exterior of the tower at night and the entrance, café, and Hall of History on the interior during the day. While the tower itself is entirely open air and needs no mechanical ventilation, the entrance, café, and Hall of History have all been placed partially below ground to limit energy needed to heat and cool the space. The spiraling volume of the partially bermed/buried building enables a passive ventilation strategies to be used. Hot air will rise up and out of the building as the cool air that has accumulated below in the lower level heats up and begins to move vertically. Geothermal wells in combination with heat exchangers will also be utilized to further reduce HVAC loads.

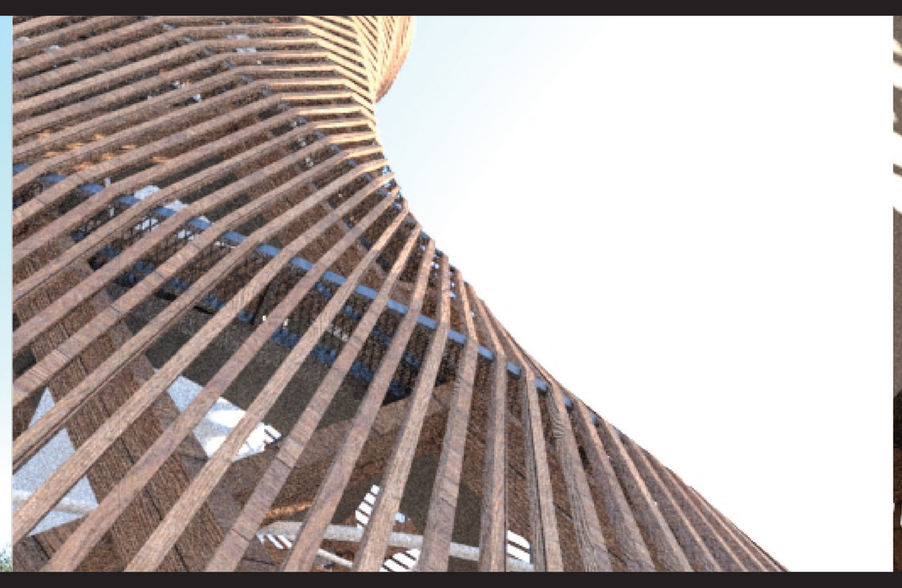

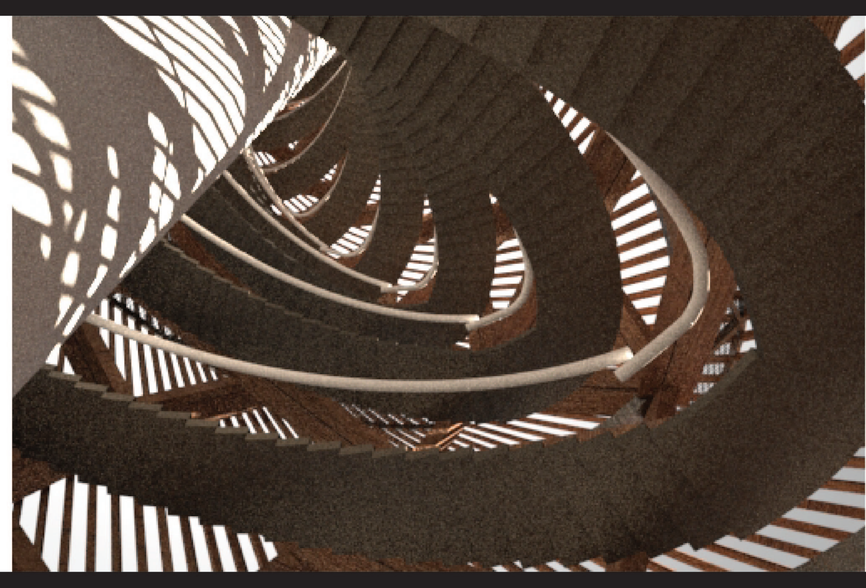

Structure, Materials, and Construction
The word twist has within its definition material and structural implications when acting on physical objects. In its most elemental form, twist is the uniting of two or more strands by winding or coiling them together. This happens quite naturally when a torsional stress is applied to an object by simply turning the ends of the object in opposite directions. Shape alteration results from compressive and tensile forces at work within the object such as yarn causing the threads to mingle by interlacing thereby increasing its strength. The degree to which an object twists is directly dependent upon the angle through which a thing is twisted.

Like a piece of rope or yarn that has been made by twisting, Twist Light Tower is constructed of layers of interlaced parts. The inner layer is a concrete elevator core which has a circular stair wrapped around it. The outer layer is a hybrid structure made of glu-lam wood, tube steel and metal cables. The glu-lam members act as a truss which circles back to join itself forming an elliptical shape. The top and bottom cords of the truss made of tube steel form rings rotated 20° from each other. The precise angle of rotation produces a skewed ruled surface that solves several problems. It aids in stability while enabling the straight members to pass one another before meeting at the structural nodes on the steel ring. To construct the tower, the concrete elevator core is poured and the elliptical trusses are placed around it in successive levels. Each elliptical truss is stacked on-top of the one before it. Steel cables are installed after the trusses have been stacked. They form diagonal connections between the structural nodes of each successive layer of steel rings. The steel cables act in tension to laterally brace the entire tower while gravitational forces are carried through the glu-lam trusses that act primarily in compression. A wood screen made of dimensional lumber unifies the exterior. It is installed as the final layer to the tower in panels attached to each level of the truss.

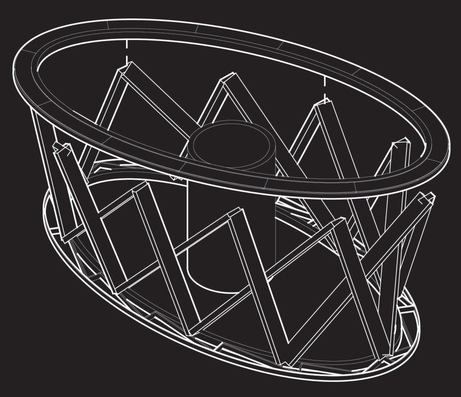

STRUCTURAL AXON - RING & TRUSS

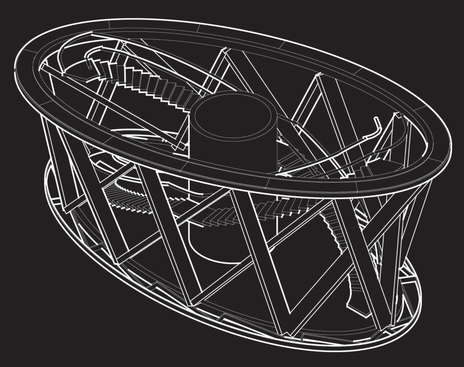

TWISTING HELICAL STAIR

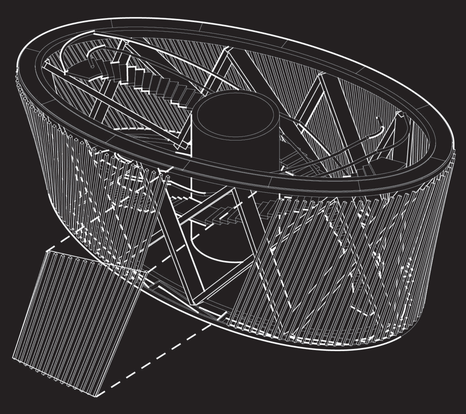

UNITIZED PANEL SCREEN

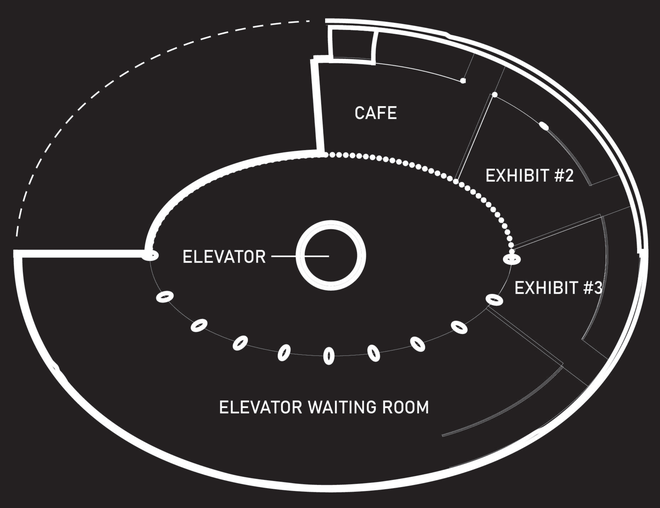

BASEMENT LEVEL (ELEVATOR ENTRY)
SCALE: 1/16":1'

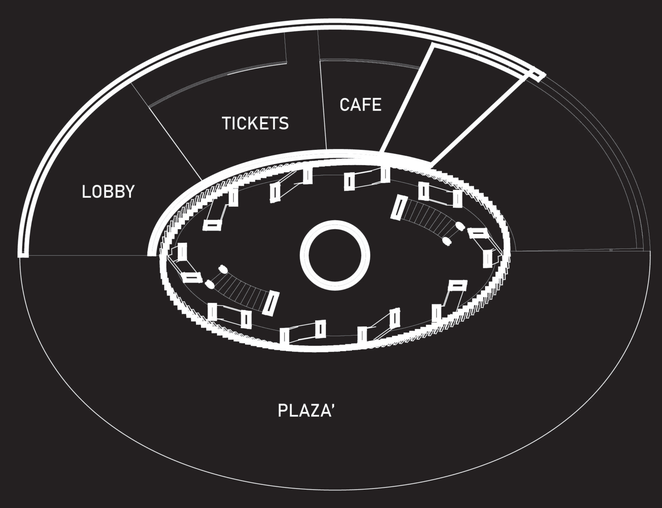

GROUND LEVEL
SCALE: 1/16":1'

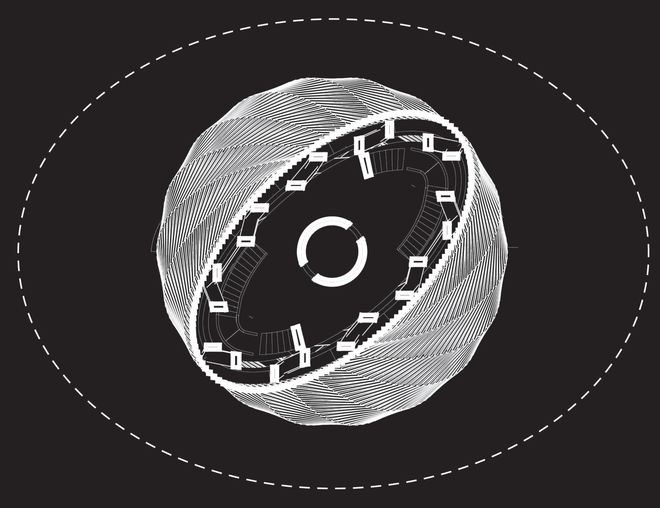

TOP LEVEL (OBSERVATION DECK)
SCALE: 1/16":1'

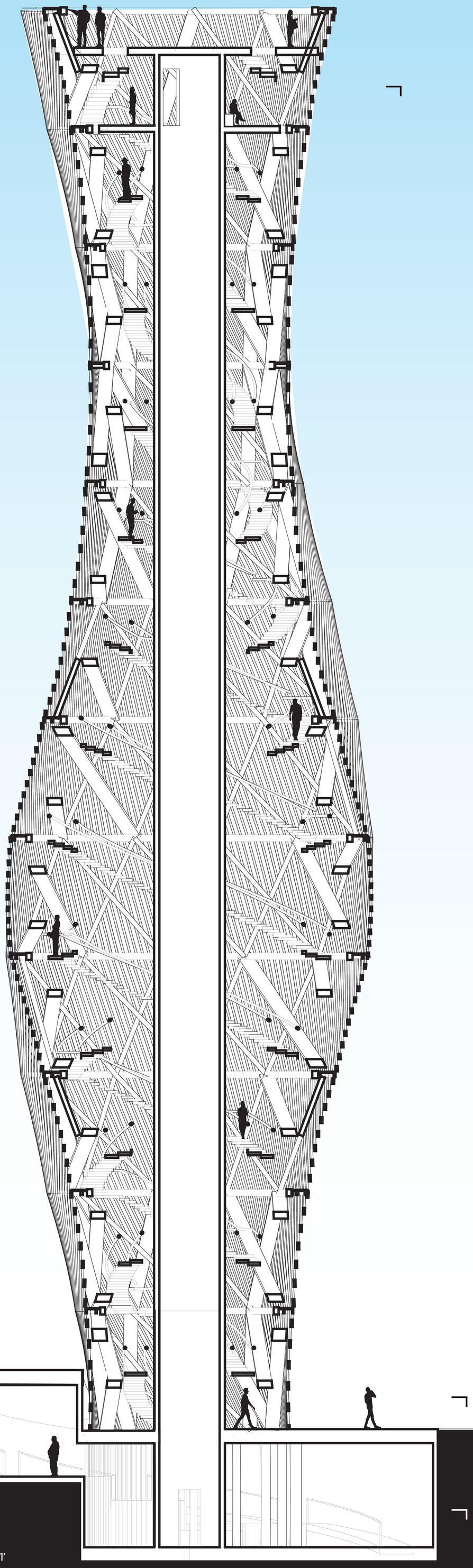

SECTION
SCALE: 1/8":1'

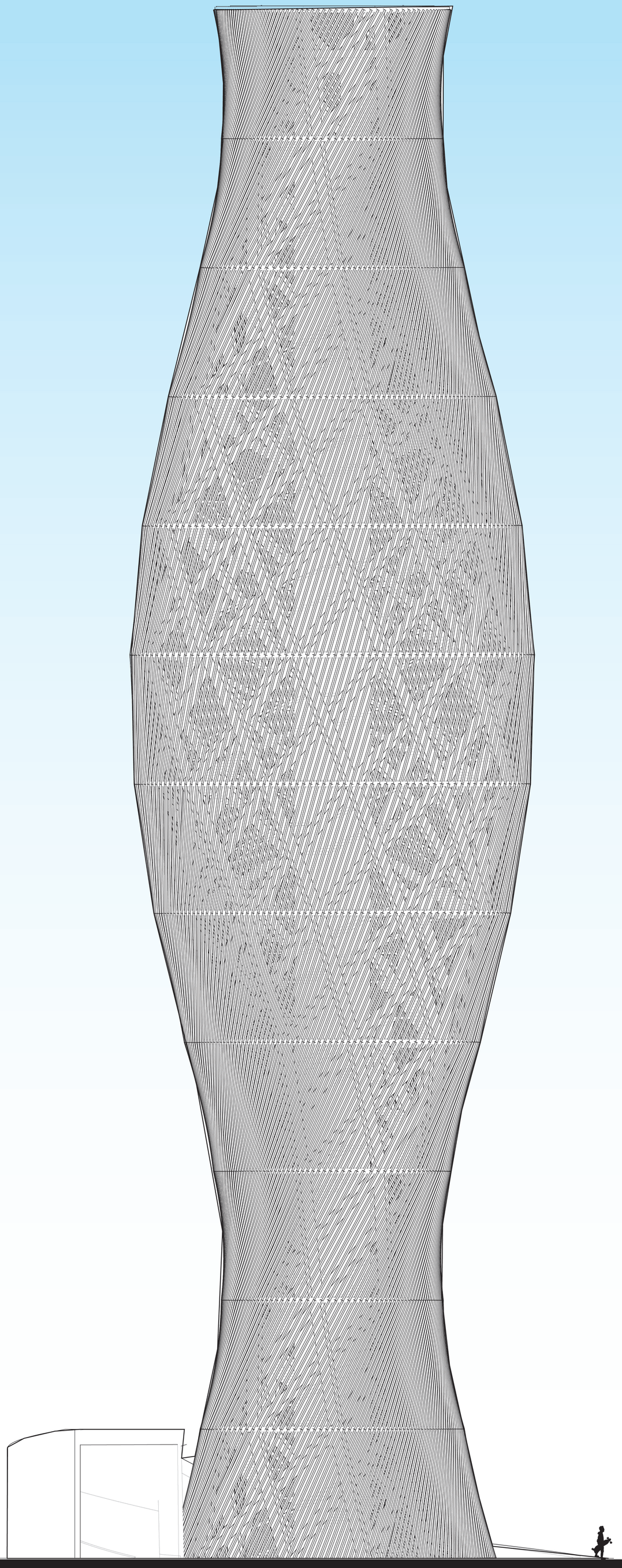
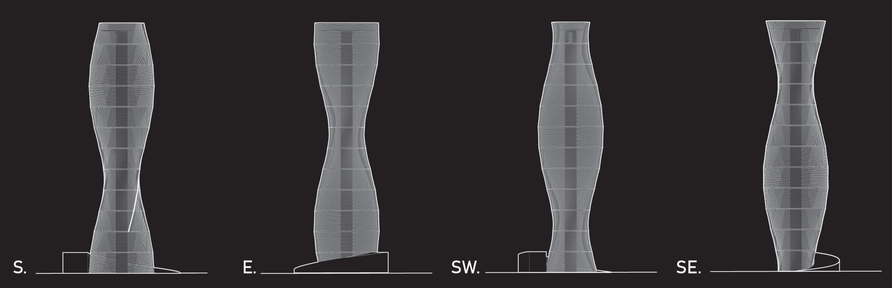
ELEVATION
SCALE: 1/8":1'